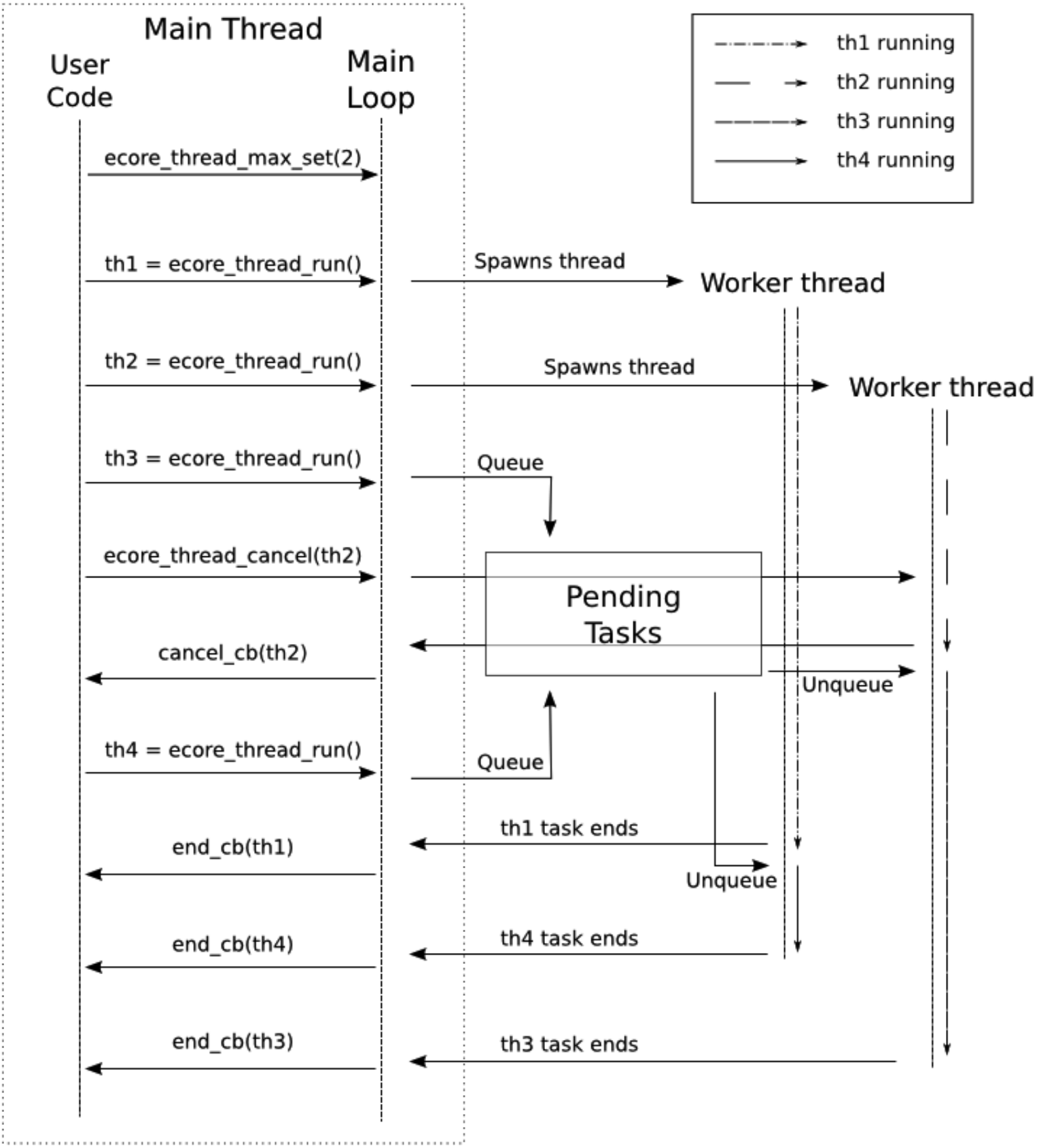
Main Thread
User Code
Main Loop
th1 running
th2 running
th3 running
th4 running
ecore_thread_max_set(2)
th1 = ecore_thread_run()
Spawns thread
Worker thread
th2 = ecore_thread_run()
Spawns thread
Worker thread
th3 = ecore_thread_run()
Queue
ecore_thread_cancel(th2)
Pending Tasks
cancel_cb(th2)
Unqueue
th4 = ecore_thread_run()
Queue
th1 task ends
end_cb(th1)
Unqueue
th4 task ends
end_cb(th4)
end_cb(th3)
th3 task ends